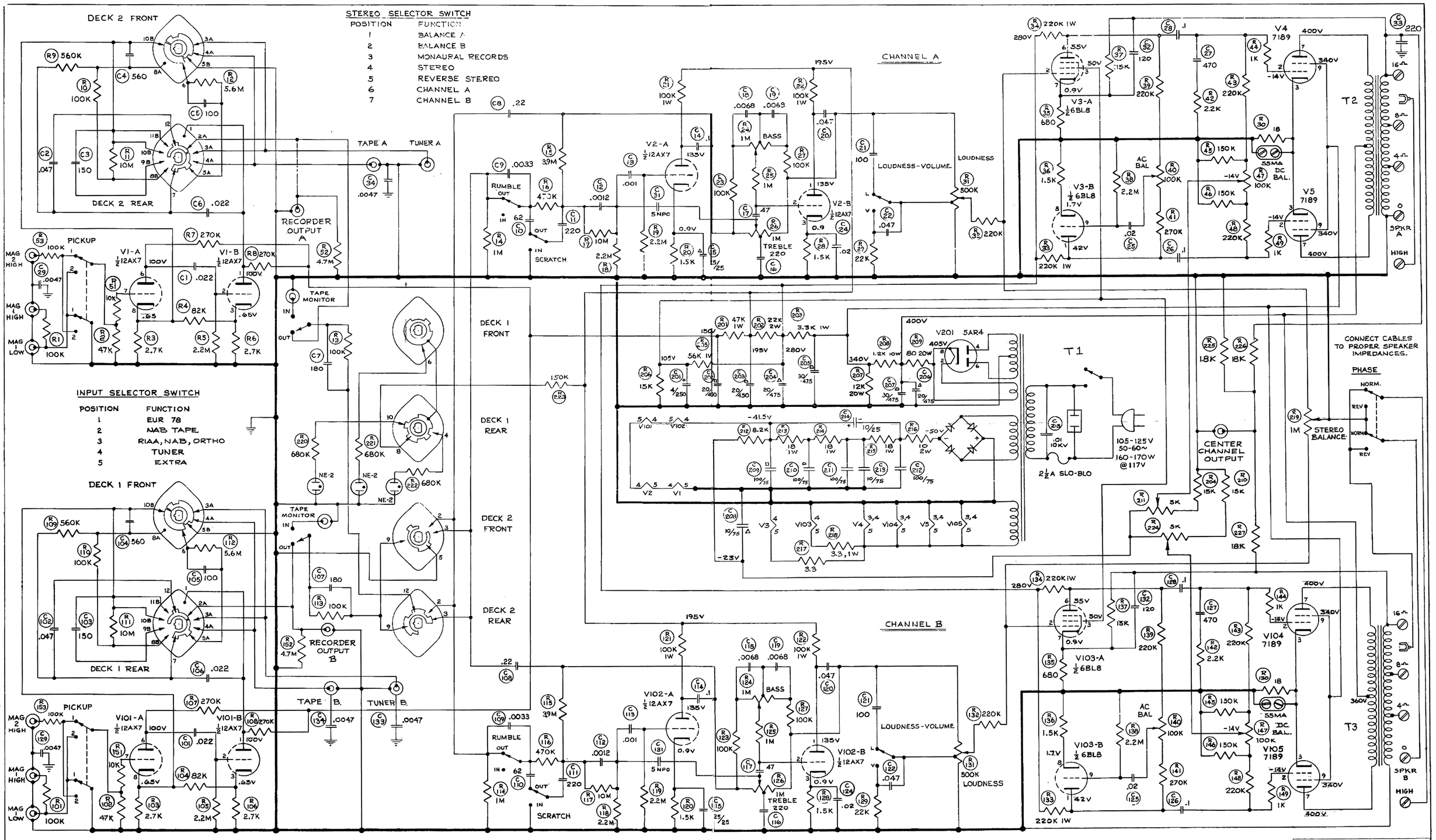

STEREO SELECTOR SWITCH

POSITION	FUNCTION
1	BALANCE A
2	BALANCE B
3	MONAURAL RECORDS
4	STEREO
5	REVERSE STEREO
6	CHANNEL A
7	CHANNEL B

INPUT SELECTOR SWITCH

POSITION	FUNCTION
1	EUR 78
2	NAB TAPE
3	RIAA, NAB, ORTHO
4	TUNER
5	EXTRA

THE FOLLOWING CONTROLS IN CHANNEL "A" AIRE MECHANICALLY GANGED WITH IDENTICAL CONTROLS IN CHANNEL "B".

1. INPUT SELECTOR
2. SCRATCH FILTER
3. RUMBLE FILTER
4. LOUDNESS-VOLUME
5. LOUDNESS
6. PICKUP
7. TAPE MONITOR

TYPE 299 STEREO AMPLIFIER

1. VOLTAGES MEASURED WITH V.T.V.M.
2. NO INPUT SIGNAL & 117 V. LINE
3. SWITCHES SHOWN IN MAX. C.C.W. POSITION

REVISIONS	
1	CORRECTED PER ECO #389
2	CORRECTED PER ECO #403
3	CORRECTED PER ECO #408
4	REVISED/ECO #449
5	REVISED PER ECO #447
6	REVISED/ECO #418
7	REVISED PER ECO #441
8	ECO #473 ADD C 215
9	ECO #470 ADD C 215
10	ECO #491
11	

R 53	153	227	NO R 50, R 150	C 215	
C 34	184	215	NO C 30, C 130	R 227	

SCALE: NONE	26 SEPT. 1958
299-B CIRCUIT DIAGRAM	
H. H. SCOTT, INC. MAYNARD, MASS., U.S.A.	
DR: DYSZCZYK	ENG: JWC
CH: R. P. Dooling	PROD:
DWG. NO. D-299-C1	SUB