AUDIO NOTE CO. UK. LTD.

BALANCE AND VOLUME

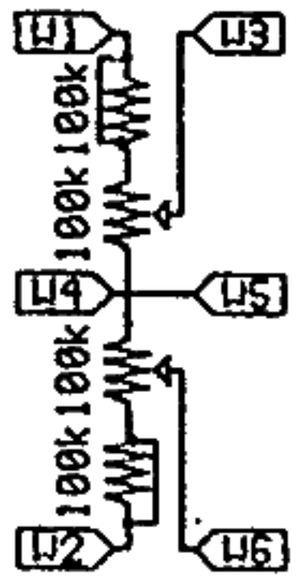

LINESTAGE

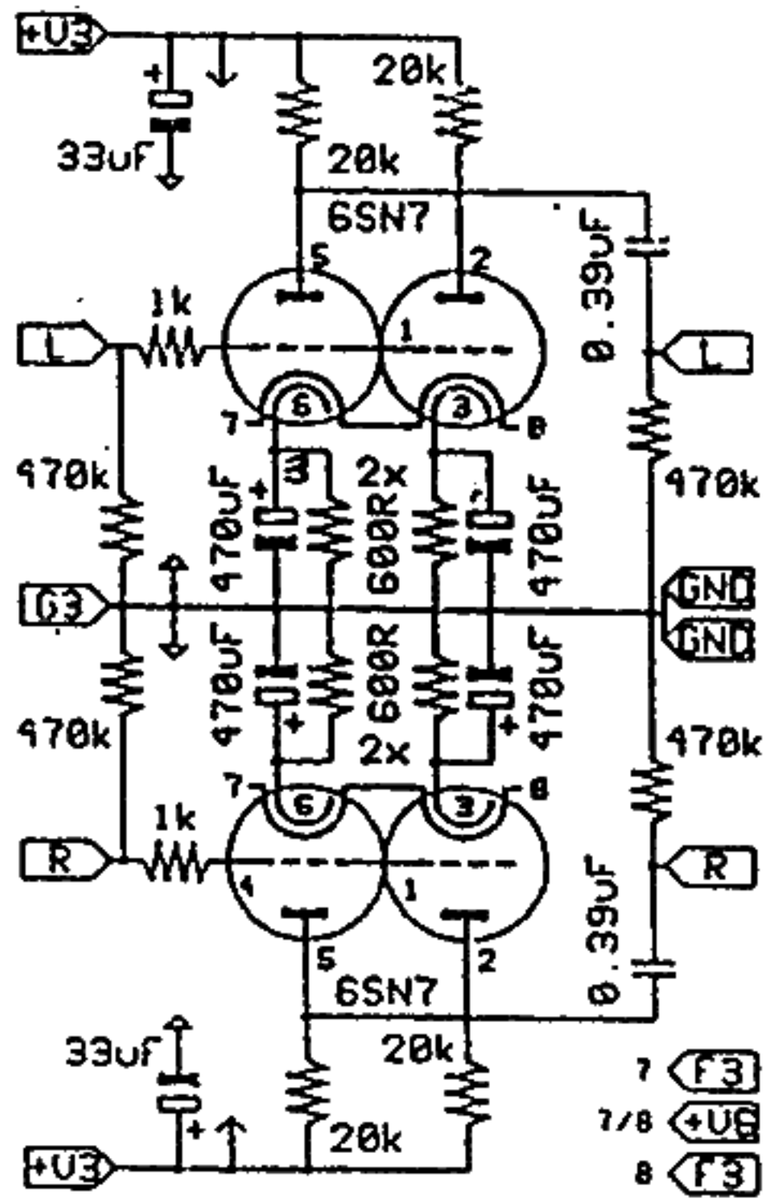

300B POWER-AMPLIFIER

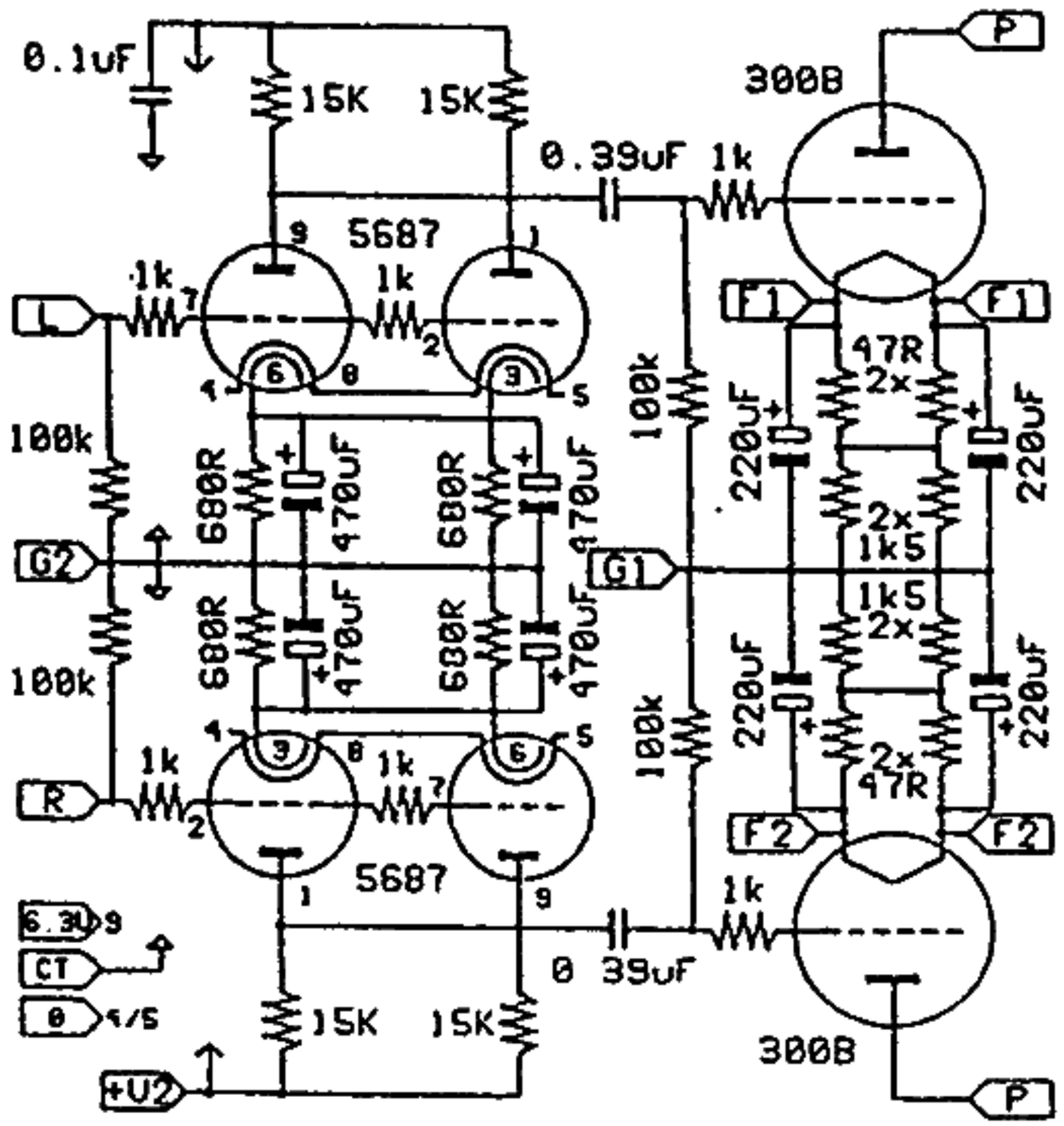

I/O AND SWITCHING

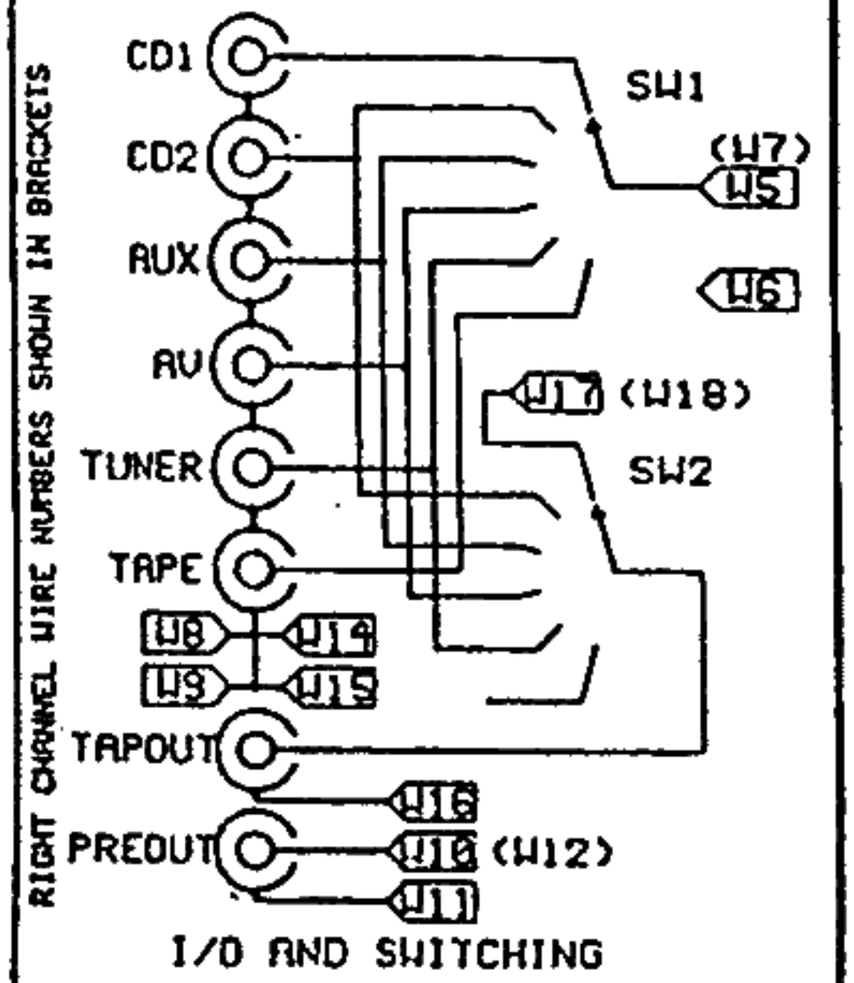

RECTIFICATION

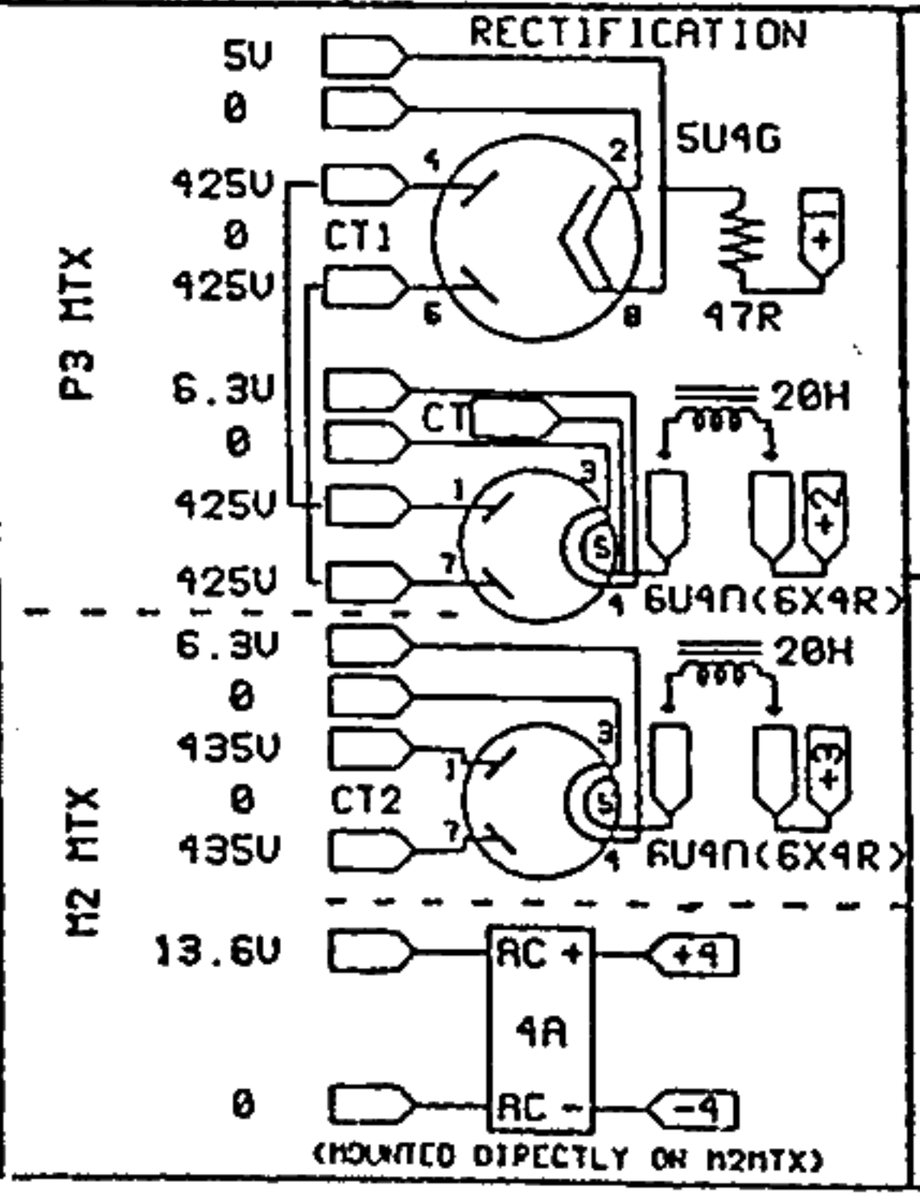

+U1 SMOOTHING

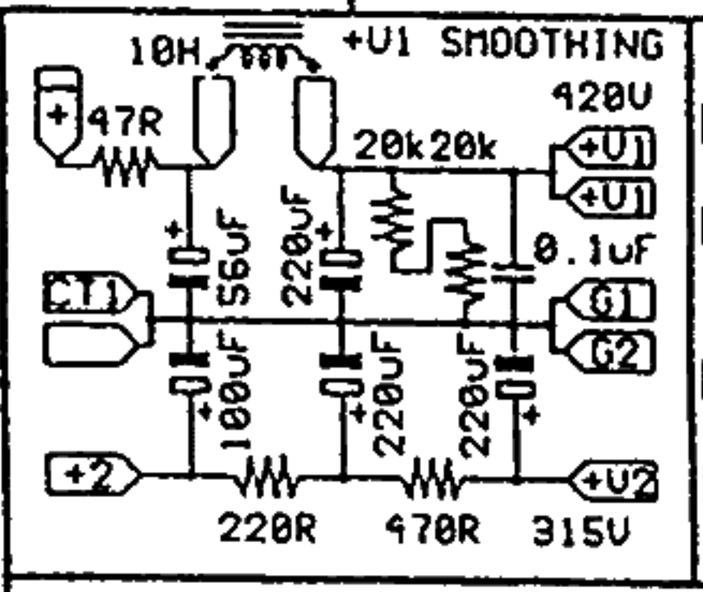

OUTPUT TRANSFORMERS

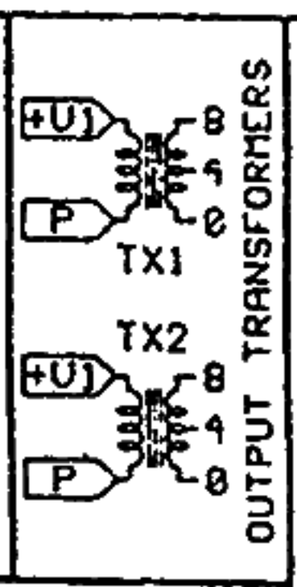

300B FILAMENT REG

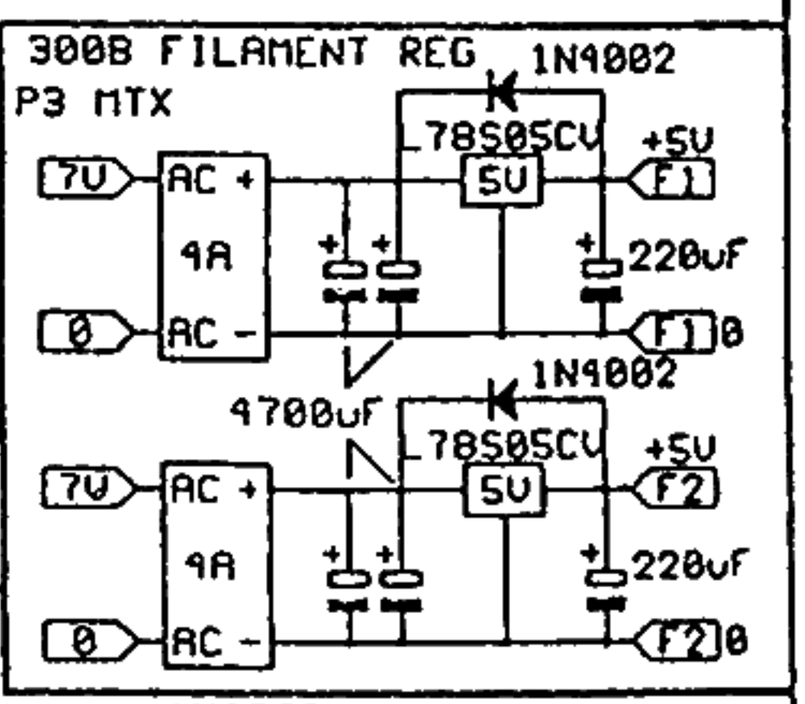

PREAMP PSU - SMOOTHING AND FILAMENT REGULATION

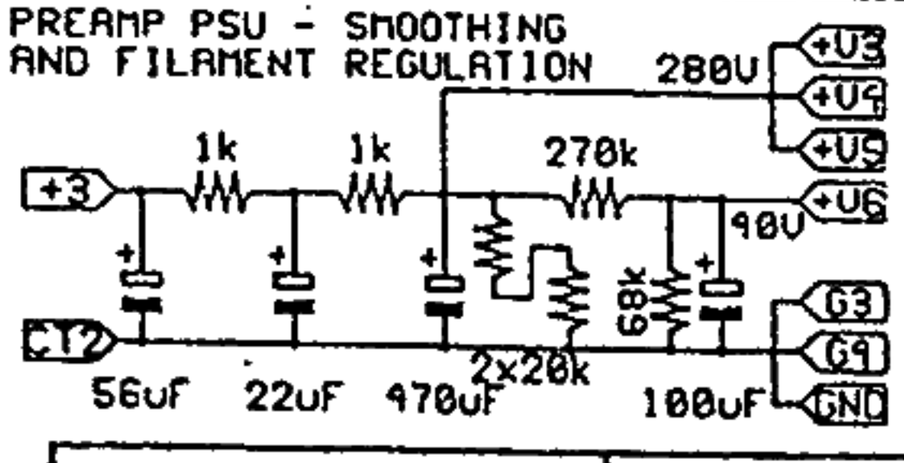

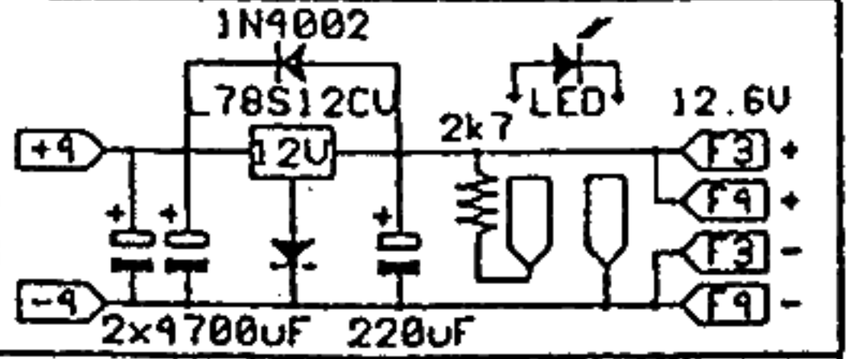

TITLE: MEISHU LINE
NO: MEL002
ISSUE: 03

DRAWN: CLAUS MØLGAARD
DATE: 31.01.1995
OK:

AUDIONOTE